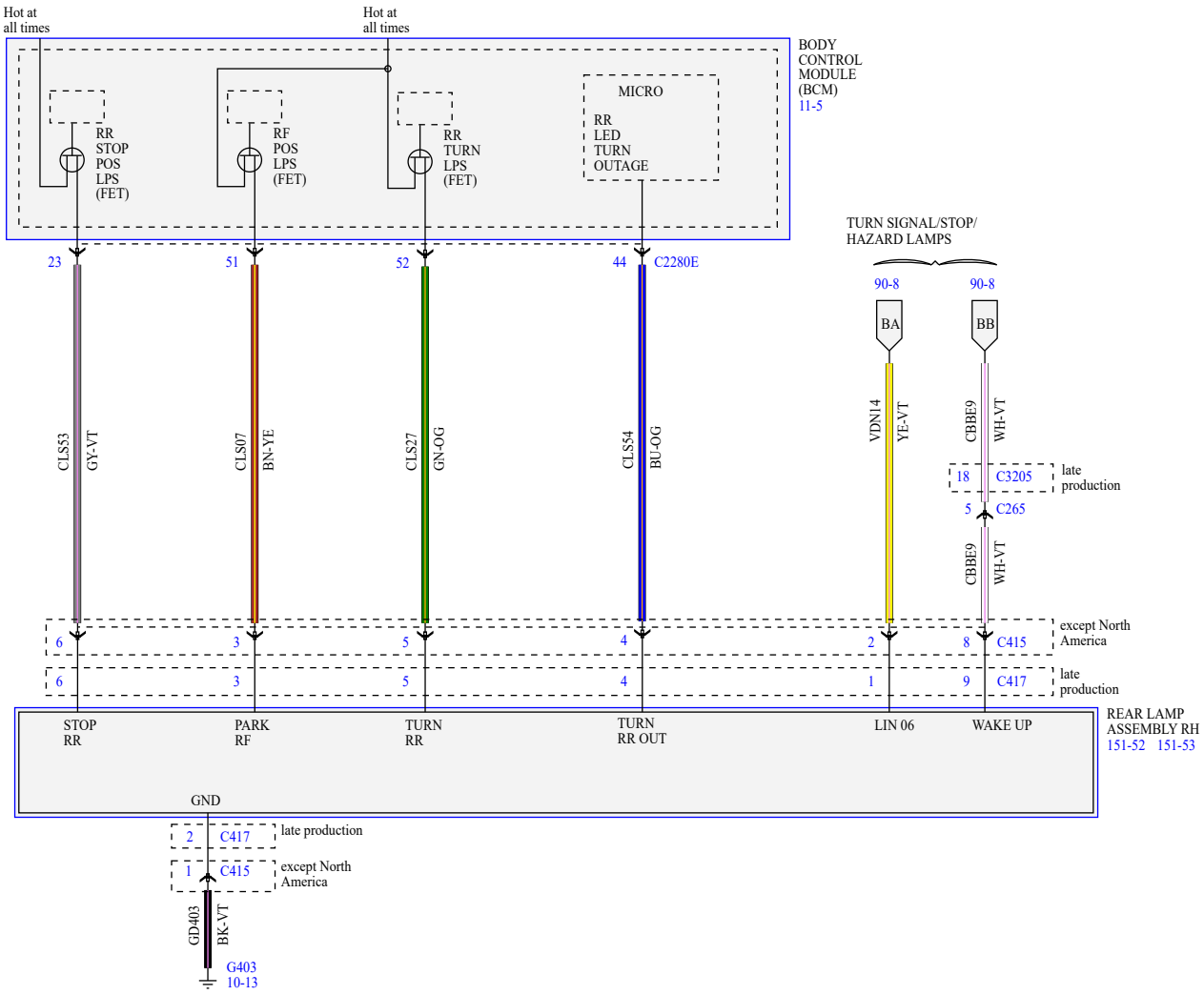
Hot at all times
Hot at all times
BODY CONTROL MODULE (BCM)
11-5
RR STOP POS LPS (FET)
RF POS LPS (FET)
RR TURN LPS (FET)
MICRO
RR LED TURN OUTAGE
TURN SIGNAL/STOP/ HAZARD LAMPS
23
51
52
44
C2280E
90-8
90-8
BA
BB
CLS53
GY-VT
CLS07
BN-YE
CLS27
GN-OG
CLS54
BU-OG
VDN14
YE-VT
CBBE9
WH-VT
18
C3205
late production
5
C265
CBBE9
WH-VT
except North America
6
3
5
4
2
8
C415
late production
6
3
5
4
1
9
C417
STOP RR
PARK RF
TURN RR
TURN RR OUT
LIN 06
WAKE UP
REAR LAMP ASSEMBLY RH
151-52 151-53
GND
2
C417
late production
1
C415
except North America
GD403
BK-VT
G403
10-13